Visit our homepage
for additional support
parker.com/pmde

Bulletin MSG30-5513-M1/UK

Spare Parts
Series F12

Effective: March, 2022
Supersedes: February, 2022

ENGINEERING YOUR SUCCESS.

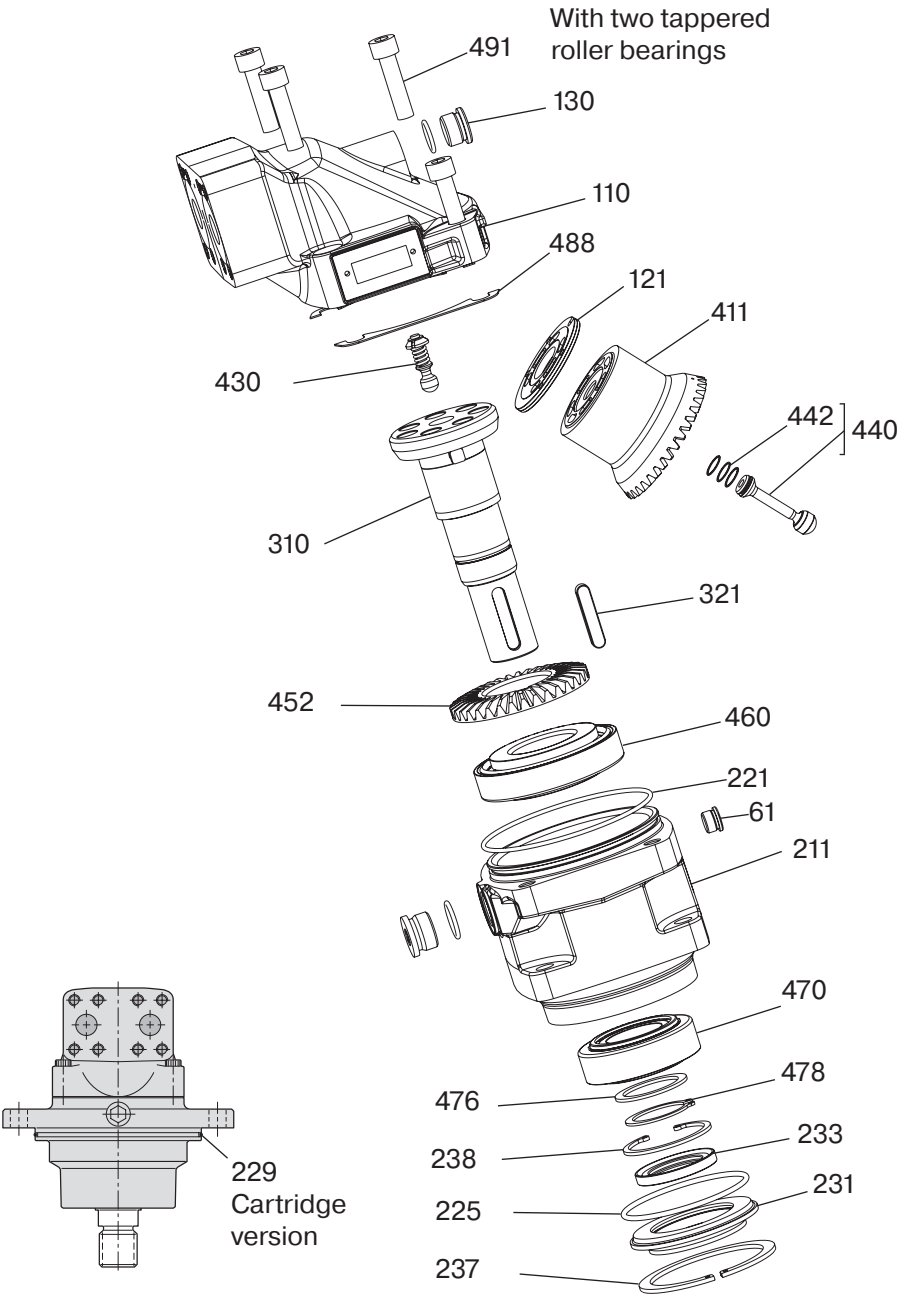
With two tappered roller bearings
491
130
110
488
121
411
430
442
440
310
321
452
460
221
61
211
470
478
476
233
238
231
225
237
229
Cartridge version

F12-030 all types from serial no. 201809300001 and up.

Pos	Part No	Description	Qty	Remarks
		Housing parts		
61		Hex Socket Plug M12*1	1	VSTI12X1EDVITCF
110	3721864	Barrel Housing Assy Type F	1	
110	3721863	Barrel Housing Assy Type S	1	
130		Hex Socket Plug for S housing	1	8 HP5ON-S
130		Hex Socket Plug for F housing	1	VSTI18X1,5EDVITCF
211	3784481	Bearing Housing Type C	1	Require item 61
211	3788317	Bearing Housing Type I	1	Require item 61
211	3788323	Bearing Housing Type S	1	Require item 61
211	3788320	Bearing Housing Type T	1	Require item 61
231	3797194	Seal Carrier	1	
		Rotating parts		
310	3799648	Shaft type C	1	
310	3799638	Shaft type D	1	
310	3799632	Shaft type K	1	Require flat key
310	3799644	Shaft type P	1	Require flat key
310	3799634	Shaft type S	1	
310	3799640	Shaft type T	1	Require flat key
321	3724437*	Flat Key for K and P shaft	1	
321	3724449*	Flat Key for T shaft	1	
430	3724477**	Barrel Support	1	
452	3791927	Ring Gear	1	

For other parts please contact Parker Hannifin

		Seal kits
	3793493	Sealing kit type V FPM
	3785132	Sealing kit type N NBR
	3784552	Sealing kit type S PTFE
	3720898	Sealing kit type S SuperCut 100
		Repair Spare part Kit
	3721446	Type M (Motor)
	3722010	Type S (High speed Motor)
	3723977	Type L (CCW pump)
	3723978	Type R (CW pump)
		Bearing spare part kit
	3723971	Bearing kit
		Shim kit
	3721330	Shims kit

*Kit contain 100 pcs, **Kit contain 20 pcs

Seal kit contain:
O-rings pos: 221, 225, 229
Shaft seal pos: 233
Retaining rings pos: 237, 238

Repair spare part kit contain:
Valve plate pos: 121
Cylinder Barrel pos: 411
Pistons pos: 440 (7 pcs)
Hex Screws pos: 491 (4 pcs)

Bearing spare part kit contain:
Tap Rol Bearing pos: 460, 470
Spacer pos: 476
Retaining rings pos: 478

Shim kit contain:
Shims pos: 488
(1 pcs on each side)

F12-040 all types from serial no. 1998020001 and up.

Pos	Part No	Description	Qty	Remarks
		Housing parts		
61		Hex Socket Plug M12*1	1	VSTI12X1EDVITCF
110	3798203	Barrel Housing Assy Type F	1	
110	3798204	Barrel Housing Assy Type S	1	
130		Hex Socket Plug for S housing	1	8 HP5ON-S
130		Hex Socket Plug for F housing	1	VSTI18X1,5EDVITCF
211	3780330	Bearing Housing Type C	1	Require item 61
211	3799967	Bearing Housing Type I	1	Require item 61
211	3780130	Bearing Housing Type S	1	Require item 61
231	3796201	Seal Carrier	1	
		Rotating parts		
310	3799455	Shaft type C	1	
310	3799457	Shaft type D	1	
310	3799451	Shaft type K	1	Require flat key
310	3799453	Shaft type S	1	
310	3799459	Shaft type T	1	Require flat key
321	3724451*	Flat Key for K shaft	1	
321	3724438*	Flat Key for T shaft	1	
430	3724474***	Barrel Support	1	
452	3791589	Ring Gear	1	

For other parts please contact Parker Hannifin

	Seal kits
3793495**	Sealing kit type V FPM
3785133**	Sealing kit type N NBR
	Repair Spare part Kit
3787798	Type M (Motor)
3723979	Type L (CCW pump)
3723980	Type R (CW pump)
	Bearing spare part kit
3723972	Bearing kit
	Shim kit
3721331	Shims kit

*Kit contain 100 pcs, ***Kit contain 20 pcs
** The kit contain 1 pcs O-ring for F12-60

Seal kit contain:
O-rings pos: 221, 225, 229
Shaft seal pos: 233
Retaining rings pos: 237, 238

Repair spare part kit contain:
Valve plate pos: 121
Cylinder Barrel pos: 411
Pistons pos: 440 (7 pcs)
Hex Screws pos: 491 (4 pcs)

Bearing spare part kit contain:
Tap Rol Bearing pos: 460, 470
Spacer pos: 476
Retaining rings pos: 478

Shim kit contain:
Shims pos: 488
(1 pcs on each side)

F12-060 all types from serial no. 1998020001 up to 202011010001. (for serial no between 202011010001-202101010001, please contact Parker)

Pos	Part No	Description	Qty	Remarks
		Housing parts		
61		Hex Socket Plug M12*1	1	VSTI12X1EDVITCF
110		Barrel Housing Assy	1	Not available
130		Hex Socket Plug	1	See next side
211	3780331	Bearing Housing Type C	1	Require item 61
211	3780127	Bearing Housing Type I	1	Require item 61
211	3780124	Bearing Housing Type S	1	Require item 61
231	3796201	Seal Carrier	1	
		Rotating parts		
310	3799686	Shaft type C	1	
310	3799688	Shaft type D	1	
310	3799682	Shaft type K	1	Require flat key
310	3799684	Shaft type S	1	
310	3799690	Shaft type T	1	Require flat key
321	3724445*	Flat Key for K shaft	1	
321	3724438*	Flat Key for T shaft	1	
430	3724478***	Barrel Support	1	
452	3799822	Ring Gear	1	

For other parts please contact Parker Hannifin

	Seal kits
3793495**	Sealing kit type V FPM
3785133**	Sealing kit type N NBR
	Repair Spare part Kit
3787799	Type M (Motor)
	Bearing spare part kit
3723973	Bearing kit
	Shim kit
3721332	Shims kit

Seal kit contain:
O-rings pos: 221, 225, 229
Shaft seal pos: 233
Retaining rings pos: 237, 238

Repair spare part kit contain:
Valve plate pos: 121
Cylinder Barrel pos: 411
Pistons pos: 440 (7 pcs)
Hex Screws pos: 491 (4 pcs)

Bearing spare part kit contain:
Tap Rol Bearing pos: 460, 470
Spacer pos: 476
Retaining rings pos: 478

Shim kit contain:
Shims pos: 488
(1 pcs on each side)

*Kit contain 100 pcs, ***Kit contain 20 pcs
** The kit contain 1 pcs O-ring for F12-40

F12-060 with needle bearings from serial no. 202011010001 and up.

Pos	Part No	Description	Qty	Remarks
		Housing parts		
61		Hex Socket Plug M12*1	1	VSTI12X1EDVITCF
110	3722721	Barrel Housing Assy Type F	1	
110	3722723	Barrel Housing Assy Type S	1	
130		Hex Socket Plug S housing	1	10 HP5ON-S
130		Hex Socket Plug F housing	1	VSTI22X1.5EDVITCF
211	3780331	Bearing Housing Type C	1	Require item 61
211	3780127	Bearing Housing Type I	1	Require item 61
211	3780124	Bearing Housing Type S	1	Require item 61
231	3796201	Seal Carrier	1	
		Rotating parts		
310	3799686	Shaft type C	1	
310	3799688	Shaft type D	1	
310	3799682	Shaft type K	1	Require flat key
310	3799684	Shaft type S	1	
310	3799690	Shaft type T	1	Require flat key
321	3724445*	Flat Key for K shaft	1	
321	3724438*	Flat Key for T shaft	1	
430	3724478***	Barrel Support	1	
452	3799822	Ring Gear	1	

For other parts please contact Parker Hannifin

	Seal kits
3793495**	Sealing kit type V FPM
3785133**	Sealing kit type N NBR
	Repair Spare part Kit
3723104	Type M (Motor)
3723981	Type L (CCW pump)
3723982	Type R (CW pump)
	Bearing spare part kit
3723973	Bearing kit
	Shim kit
3721332	Shims kit

*Kit contain 100 pcs, ***Kit contain 20 pcs
** The kit contain 1 pcs O-ring for F12-40

Seal kit contain:
O-rings pos: 221, 225, 229
Shaft seal pos: 233
Retaining rings pos: 237, 238

Repair spare part kit contain:
Valve plate pos: 121
Cylinder Barrel pos: 411
Pistons pos: 440 (7 pcs)
Hex Screws pos: 491 (4 pcs)

Bearing spare part kit contain:
Tap Rol Bearing pos: 460, 470
Spacer pos: 476
Retaining rings pos: 478

Shim kit contain:
Shims pos: 488
(1 pcs on each side)

F12-080 all types from serial no. 1998491161 and up.

Pos	Part No	Description	Qty	Remarks
		Housing parts		
61		Hex Socket Plug M12*1	1	VSTI12X1EDVITCF
110	3780658	Barrel Housing Assy Type F	1	
110	3780660	Barrel Housing Assy Type S	1	
130		Hex Socket Plug S housing	1	10 HP5ON-S
130		Hex Socket Plug F housing	1	VSTI22X1.5EDVITCF
211	3780327	Bearing Housing Type C	1	Require item 61
211	3780813	Bearing Housing Type I	1	Require item 61
211	3780812	Bearing Housing Type S	1	Require item 61
231	3796200	Seal Carrier	1	
		Rotating parts		
310	3780671	Shaft type C	1	
310	3780673	Shaft type D	1	
310	3780667	Shaft type K	1	Require flat key
310	3780669	Shaft type S	1	
310	3780675	Shaft type T	1	Require flat key
310	3780677	Shaft type U	1	
321	3724448*	Flat Key for K shaft	1	
321	3724440*	Flat Key for T shaft	1	
430	3724475**	Barrel Support	1	
452	3787847	Ring Gear	1	

For other parts please contact Parker Hannifin

	Seal kits
3793499	Sealing kit type V FPM
3785136	Sealing kit type N NBR
	Repair Spare part Kit
3787800	Type M (Motor)
3723983	Type L (CCW pump)
3723984	Type R (CW pump)
	Bearing spare part kit
3723974	Bearing kit
	Shim kit
3721333	Shims kit

*Kit contain 100 pcs, **Kit contain 20 pcs

Seal kit contain:
O-rings pos: 221, 225, 229
Shaft seal pos: 233
Retaining rings pos: 237, 238

Repair spare part kit contain:
Valve plate pos: 121
Cylinder Barrel pos: 411
Pistons pos: 440 (7 pcs)
Hex Screws pos: 491 (4 pcs)

Bearing spare part kit contain:
Tap Rol Bearing pos: 460, 470
Spacer pos: 476
Retaining rings pos: 478

Shim kit contain:
Shims pos: 488
(1 pcs on each side)

Pos	Part No	Description	Qty	Remarks
		Housing parts		
61		Hex Socket Plug M12*1	1	VSTI12X1EDVITCF
110	3780658	Barrel Housing Assy Type F	1	
110	3780660	Barrel Housing Assy Type S	1	
130		Hex Socket Plug S housing	1	10 HP5ON-S
130		Hex Socket Plug F housing	1	VSTI22X1.5EDVITCF
211	3780327	Bearing Housing Type C	1	Require item 61
211	3780813	Bearing Housing Type I	1	Require item 61
211	3780812	Bearing Housing Type S	1	Require item 61
231	3796200	Seal Carrier	1	
		Rotating parts		
310	3780671	Shaft type C	1	
310	3780673	Shaft type D	1	
310	3780667	Shaft type K	1	Require flat key
310	3780669	Shaft type S	1	
310	3780675	Shaft type T	1	Require flat key
310	3780677	Shaft type U	1	
321	3724448*	Flat Key for K shaft	1	
321	3724440*	Flat Key for T shaft	1	
430	3724475**	Barrel Support	1	
452	3787847	Ring Gear	1	

For other parts please contact Parker Hannifin

	Seal kits
3793499	Sealing kit type V FPM
3785136	Sealing kit type N NBR
	Repair Spare part Kit
3787801	Type M (Motor)
3723985	Type L (CCW pump)
3723986	Type R (CW pump)
	Bearing spare part kit
3723974	Bearing kit
	Shim kit
3721333	Shims kit

Seal kit contain:
O-rings pos: 221, 225, 229
Shaft seal pos: 233
Retaining rings pos: 237, 238

Repair spare part kit contain:
Valve plate pos: 121
Cylinder Barrel pos: 411
Pistons pos: 440 (7 pcs)
Hex Screws pos: 491 (4 pcs)

Bearing spare part kit contain:
Tap Rol Bearing pos: 460, 470
Spacer pos: 476
Retaining rings pos: 478

Shim kit contain:
Shims pos: 488
(1 pcs on each side)

*Kit contain 100 pcs, **Kit contain 20 pcs

F12-110 from serial no. 200402010001 and up

Pos	Part No	Description	Qty	Remarks
		Housing parts		
61		Hex Socket Plug M12*1	1	VSTI12X1EDVITCF
110	3709914	Barrel Housing Assy Type F	1	
110	3794372	Barrel Housing Assy Type S	1	
130		Hex Socket Plug S housing	1	12 HP5ON-S
130		Hex Socket Plug F housing	1	VSTI22X1.5EDVITCF
211	3781449	Bearing Housing Type C	1	Require item 61
211	3781447	Bearing Housing Type I	1	Require item 61
211	3781448	Bearing Housing Type S	1	Require item 61
231	3796182	Seal Carrier	1	
		Rotating parts		
310	3783323	Shaft type C	1	
310	3783322	Shaft type D	1	
310	3783321	Shaft type K	1	Require flat key
310	3783320	Shaft type S	1	
310	3783324	Shaft type T	1	Require flat key
321	3724446*	Flat Key for K shaft	1	
321	3724439*	Flat Key for T shaft	1	
430	3724476**	Barrel Support	1	
452	3783319	Ring Gear	1	

Seal kit contain:
O-rings pos: 221, 225, 229
Shaft seal pos: 233
Retaining rings pos: 237, 238

For other parts please contact Parker Hannifin

	Seal kits
3798092	Sealing kit type V FPM
3785137	Sealing kit type N NBR
	Repair Spare part Kit
3787802	Type M (Motor)
3723987	Type L (CCW pump)
3723988	Type R (CW pump)
	Bearing spare part kit
3723975	Bearing kit
	Shim kit
3721334	Shims kit

Repair spare part kit contain:
Valve plate pos: 121
Cylinder Barrel pos: 411
Pistons pos: 440 (7 pcs)
Hex Screws pos: 491 (4 pcs)

Bearing spare part kit contain:
Tap Rol Bearing pos: 460, 470
Spacer pos: 476
Retaining rings pos: 478

Shim kit contain:
Shims pos: 488
(1 pcs on each side)

*Kit contain 100 pcs, **Kit contain 20 pcs

Pos	Part No	Description	Qty	Remarks
		Housing parts		
61		Hex Socket Plug M12*1	1	VSTI12X1EDVITCF
110	3709914	Barrel Housing Assy Type F	1	
110	3794372	Barrel Housing Assy Type S	1	
130		Hex Socket Plug S housing	1	12 HP5ON-S
130		Hex Socket Plug F housing	1	VSTI22X1.5EDVITCF
211	3781449	Bearing Housing Type C	1	Require item 61
211	3781447	Bearing Housing Type I	1	Require item 61
211	3781448	Bearing Housing Type S	1	Require item 61
231	3796182	Seal Carrier	1	
		Rotating parts		
310	3783323	Shaft type C	1	
310	3783322	Shaft type D	1	
310	3783321	Shaft type K	1	Require flat key
310	3783320	Shaft type S	1	
310	3783324	Shaft type T	1	Require flat key
321	3724446*	Flat Key for K shaft	1	
321	3724439*	Flat Key for T shaft	1	
430	3724476**	Barrel Support	1	
452	3783319	Ring Gear	1	

For other parts please contact Parker Hannifin

	Seal kits
3798092	Sealing kit type V FPM
3785137	Sealing kit type N NBR
	Repair Spare part Kit
3787803	Type M (Motor)
3723989	Type L (CCW pump)
3723990	Type R (CW pump)
	Bearing spare part kit
3723975	Bearing kit
	Shim kit
3721334	Shims kit

Seal kit contain:
O-rings pos: 221, 225, 229
Shaft seal pos: 233
Retaining rings pos: 237, 238

Repair spare part kit contain:
Valve plate pos: 121
Cylinder Barrel pos: 411
Pistons pos: 440 (7 pcs)
Hex Screws pos: 491 (4 pcs)

Bearing spare part kit contain:
Tap Rol Bearing pos: 460, 470
Spacer pos: 476
Retaining rings pos: 478

Shim kit contain:
Shims pos: 488
(1 pcs on each side)

*Kit contain 100 pcs, **Kit contain 20 pcs

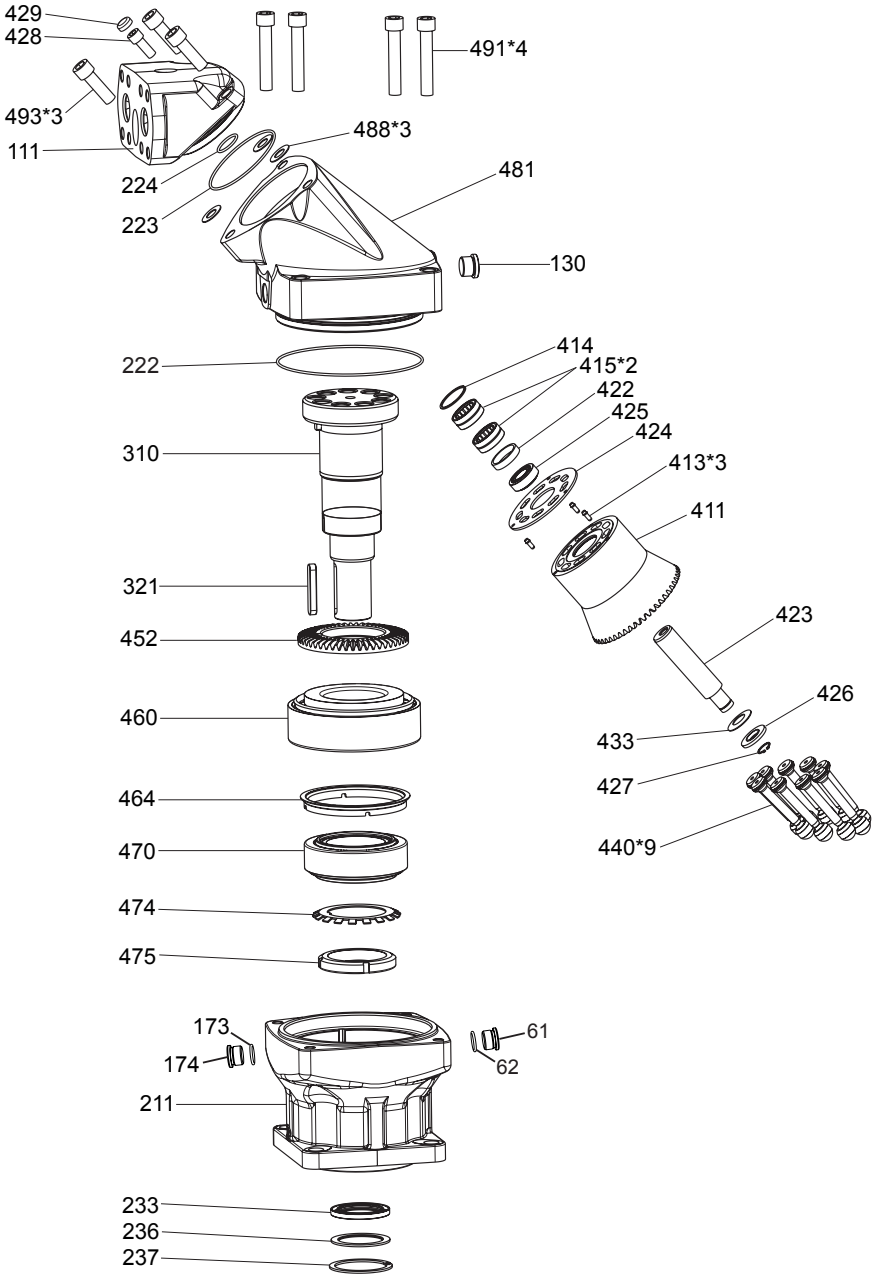
429
428
491*4
493*3
488*3
111
224
481
223
130
414
415*2
222
422
425
424
310
413*3
411
321
423
452
426
460
433
427
464
440*9
470
474
475
173
61
174
62
211
233
236
237

Pos	Part No	Description	Qty	Remarks
		Housing parts		
61		Hex Socket Plug M12*1	1	VSTI12X1EDVITCF
111	3795856	End Cap QF Motor	1	
130		Hex Socket Plug	1	VSTI3/4EDVITCF
174		Hex Socket Plug	1	VSTI12X1EDVITCF
211	3787080	Bearing Housing Type S	1	Require item 130 174 251
251		Hex Socket Plug	1	4 HP5ON-S
481	3788726	Barrel housing	1	Require item 61
		Rotating parts		
310	3788751	Shaft type K	1	Require flat key
310	3789501	Shaft type F	1	
310	3788839	Shaft type S	1	
321	3724446*	Flat Key for K shaft	1	
452	3787126	Ring Gear	1	

For other parts please contact Parker Hannifin

	Seal kits
3797126	Sealing kit type V FPM
	Repair Spare part Kit
3723738	REPAIR SPARE KIT F12-250
	Bearing spare part kit
3723976	Bearing kit
	Shim kit
3721336	Shims kit

Seal kit contain:
O-rings pos: 222, 223, 224
Shaft seal pos: 233
Back up ring pos: 236
Retaining rings pos: 237
Hex Screw pos: 428, 429

Repair spare part kit contain pos:
411,413, 414, 415, 422,423, 424, 425, 426, 427, 428, 429, 433, 440, 491, 493

Bearing spare part kit contain:
Tap Rol Bearing pos: 460, 470
Spacer ring pos: 464
Lock washer pos: 474
Round nut pos: 475

Shim kit contain:
Shims pos: 488
(1 pcs on each side)

*Kit contain 100 pcs

Notes

Parker Hannifin
Pump & Motor Division Europe
Trollhättan, Sweden

Notes

Parker Hannifin
Pump & Motor Division Europe
Trollhättan, Sweden

Notes

Parker Hannifin
Pump & Motor Division Europe
Trollhättan, Sweden

Position notification regarding Machinery Directive 2006/42/EC:

Products made by the Pump & Motor Division Europe (PMDE) of Parker Hannifin are excluded from the scope of the machinery directive following the “Cetop” Position Paper on the implementation of the Machinery Directive 2006/42/EC in the Fluid Power Industry.

All PMDE products are designed and manufactured considering the basic as well as the proven safety principles according to:

- ISO 13849-1:2015
- SS-EN ISO 4413:2010

so that the machines in which the products are incorporated meet the essential health and safety requirements.

Confirmations for components to be proven component, e. g. for validation of hydraulic systems, can only be provided after an analysis of the specific application, as the fact to be a proven component mainly depends on the specific application.

Dr. Hans Haas
General Manger
Pump & Motor Division Europe

WARNING – USER RESPONSIBILITY

FAILURE OR IMPROPER SELECTION OR IMPROPER USE OF THE PRODUCTS DESCRIBED HEREIN OR RELATED ITEMS CAN CAUSE DEATH, PERSONAL INJURY AND PROPERTY DAMAGE.

This document and other information from Parker-Hannifin Corporation, its subsidiaries and authorized distributors provide product or system options for further investigation by users having technical expertise.

The user, through its own analysis and testing, is solely responsible for making the final selection of the system and components and assuring that all performance, endurance, maintenance, safety and warning requirements of the application are met. The user must analyze all aspects of the application, follow applicable industry standards, and follow the information concerning the product in the current product catalogue and in any other materials provided from Parker or its subsidiaries or authorized distributors.

To the extent that Parker or its subsidiaries or authorized distributors provide component or system options based upon data or specifications provided by the user, the user is responsible for determining that such data and specifications are suitable and sufficient for all applications and reasonably foreseeable uses of the components or systems.

Offer of Sale

Please contact your Parker representation for a detailed ”Offer of Sale”.

Parker Hannifin Manufacturing Sweden AB
Pump & Motor Division Europe
Flygmotorvägen 2
461 82 Trollhättan
Sweden
Tel. +46 (0)520 40 45 00
www.parker.com/pmde

© Copyright 2021
All rights reserved